TRU-VU™ CUSTOMIZABLE INDUSTRIAL MONITORS

VM-27 Series

Customizable HD LCD Monitors

- 27" HD Color LCD Monitor
- Full HD Resolution: 1920 x 1080 (1080p/60)
- Wide Viewing Angle: 178° x 178°
- Video Inputs: VGA, HDMI, DisplayPort and Composite (BNC)
- Auto Re-Start After Power Loss
- Can Be Customized to Meet Your Needs
- 3 Year Warranty

The VM-27 Series full HD widescreen LCD monitors provide brilliant color, amazing high-def resolution and incredible picture quality. The VM-27 Series monitors offer VGA, HDMI, DisplayPort, and DVI and Composite (BNC) analog and digital video input capabilities, as well as dual audio speakers. An extensive list of available OEM options enables you to customize the VM-27 Series monitors to your specific needs. The VM-27 Series monitors are ideal for industrial, broadcast, digital signage, medical and commercial applications. They are backed by our standard 3-Year Warranty.

All **TRU-Vu** industrial LCD monitors are specifically designed for use in demanding applications. Every **TRU-Vu** monitor utilizes industrial-grade components and high-end LCD panels not found in retail/consumer-grade monitors. This ensures superior image quality, improved performance and greater durability. Visit www.TRU-VuMonitors.com for more details.

	Specifications		
MODEL	**VM-27R**	**VM-27D**	**VM-27D-M**
LCD Panel	27" Color LCD; LED Backlights		
Display Resolution	1920 x 1080 (1080p/60, Full HD)		
Viewable Area	23.53" (W) x 13.23" (H) (597.6 x 336.15 mm)		
Pixel Pitch	0.311 mm		
Display Colors	16.7M		
Aspect Ratio	16:9		
Brightness	300 nits		
Contrast Ratio	3,000:1		
Viewing Angle	178° x 178° (V)		
Response Time	12 msec		
Control	OSD (On-Screen DIsplay) via Front Pushbuttons		
Video Inputs	VGA, HDMI, DisplayPort	VGA, HDMI, 3 Composite BNC Inputs, 1 Composite BNC Output	
Audio	Dual Speakers	Optional	
Power Requirement	12 VDC/90-240 VAC via Included Power Brick	24 VDC or 100-240 VAC via Internal Power Supply	
Power Consumption	60W (max)		
Enclosure	ABS		Powder-Coated Steel
Mounting	Included Base or via 100 x 100, 100 x 200 and 200 x 100 VESA Hole Pattern		
Operating Temperature	+32° to +122° F (0° to +50° C)		
Storage Temperature	-4° to +140° F (-20° to +60° C)		
Humidity	5-90% RH		
Shock	50 G (20 msec, ½ sine)		
Vibration	1.5G RMS 10-200 HZ		
Dimensions	25.38" (W) x 15.25" (H) x 2.63" (D) (644.65 x 387.35 x 66.8 mm)		25" (W) x 15.25 (H) x 1.875" (D) (635 x 387.35 x 47.625mm)
Weight	10.8 lbs. (4.89 Kg)		13.2 lbs. (5.98 Kg)

VM-27 Series

Customizable HD LCD Monitors

Dimensions:

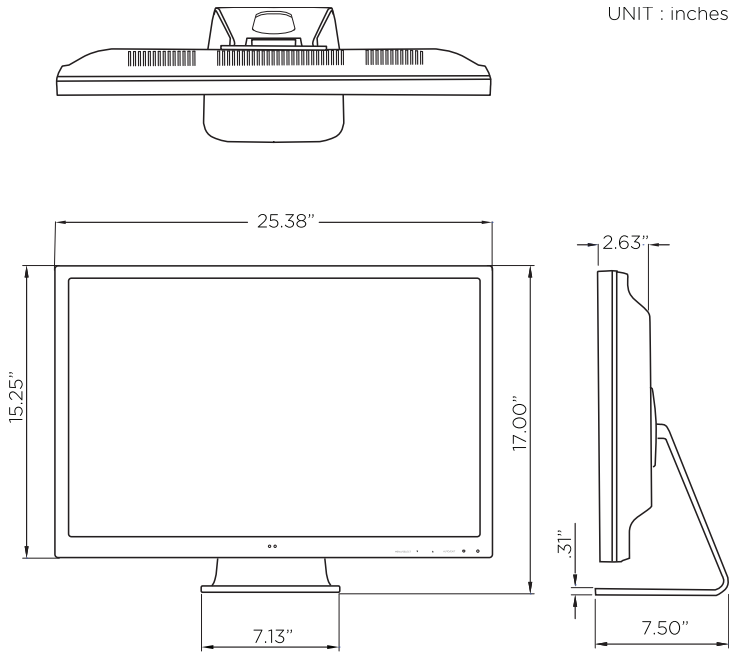

Standard Accessories:

- 90-240 VAC Power Brick (VM-27R only)
- 24 VDC Power Pigtail (VM-27D only)
- VGA & HDMI Cables
- Tabletop Base
- Remote Control (VM-27D only)

Available Options:

- Wall Mount Brackets
- Remote Control (VM-27R only)
- Touch Screen
- Open-Frame Configuration
- Private-Label
- Other Customer-Specific Modifications

TRU-Vu Monitors, Inc. | 925 E Rand Road Arlington Hts, IL 60004 | Ph: 847.259.2344 | www.TRU-VuMonitors.com

Specifications subject to change without notice.