VL-SRMH-32A

32" High Bright LCD Display

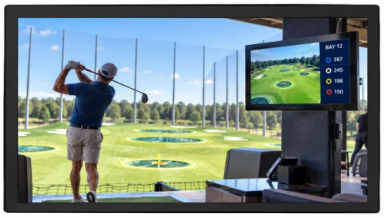

- 1,500 nits Brightness
- Full HD Resolution 1920 x 1080
- *TRU-Tuff* Treatment for Maximum Shock/Vibration Resistance
- Protective Anti-Glare Glass
- IP65 Front Surface
- Automated Ambient Light Sensor

32″ HIGH BRIGHTNESS MONITORS

The VL-SRMH-32A are 32″ High Bright LCD displays. It is a 16:9 aspect ratio with full HD resolution. We design the VL-SRMH-32A monitors for use high ambient-light conditions. They utilize state-of-the-art LED backlights. They feature 1500 nits brightness. In contrast, this is over 3 to 5 times brighter than standard monitors. For example, standard monitors are only 200-300 nits brightness. Therefore, the result is amazingly bright screen. This will provide you with crystal-clear images.

32″ RUGGED INDUSTRIAL LCD DISPLAYS

The VL-SRMH-32A LCD monitors are extremely rugged. For instance, we build them with true industrial-grade components. Furthermore, they receive our exclusive *TRU-Tuff* treatment. The *TRU-Tuff* process includes RTV silicone on all connections and critical components. Additionally, all wires are dressed, tie-wrapped and secured. Lastly, we apply ThreadLock to all screws. The rugged steel enclosure option will ensure maximum shock and vibration resistance for this rugged high bright monitor. Additionally, the VL-SRMH-32A has anti-glare glass to protect the LCD panel.

HIGH BRIGHTNESS LCD DISPLAYS DEPLOYED WORLDWIDE

Our 32″ high bright displays have been deployed in a wide range of demanding industries. For example, military, law enforcement, manufacturing plants benefit from high bright screens. They are also found in Amusement parks, sports stadiums, mass transit, and construction & heavy equipment. Additionally, see how digital signage and museums also enjoy TRU-Vu displays. Additionally, You may also see 27′" high brightness displays in popular kiosk displays prominently.

THE BEST 32″ HIGH BRIGHTNESS LCD MONITOR – LET US ASSIST IN YOUR SELECTION

With over 200 LCD monitors and touch screens on our site, selecting the ideal weatherproof touch screen solution may be a bit overwhelming. To help narrow-down the choices, check out our Advanced Search Tool. For example, this enables you to filter by product attributes important to you. See our full line-up of industrial-grade Sunlight Readable and Daylight Readable monitors and touchscreens. This highlights all of our high brightness monitors and sunlight readable touch screens in all the sizes and configurations available. Shop by size 21.5″ to 65″ monitors, or see all 24 VDC monitors. Visit our wide range of LCD monitor mounts and stands. Custom OEM LCD Displays and Private Label Monitors are also an option if you have very specific requirements.

Finally, our team members are ready to help! We can determine the exact solution that will meet your specific needs . Certainly, TRU-Vu will help provide crystal-clear images for your operating requirements . Call (847) 259-2344 today to speak with one of our specialists. Above all, we will listen. It's one of the things we do best. Our professional advisors will ensure the monitor or touch screen you receive will be and do everything you had hoped it would!

If you prefer, fill out a quick form with your requirements, and we will guide you to the proper models that will work best.

SPECIFICATIONS

	VL-SRMH-32A
LCD Panel	32″ MVA LCD; LED Backlights
Native Resolution	1920 x 1080 (1080P/60 Full HD)
Aspect Ratio	16:9
Viewable Area	27.50” (W) x 15.47”(H) (698.4 x 392.85 mm)
Pixel Pitch	0.364mm x 0.364mm
Display Colors	16.7 M
Brightness	1,500 nits
Contrast Ratio	4,000:1
Viewing Angle	178° (H) x 178° (V)
Response Time	6.5 msec (Tr+Tf)
Video Inputs	VGA, DVI & HDMI
Touch Technology/Interface	N/A
Control	OSD (On-Screen Display) via Rear Push Buttons
Power Input	24 VDC / 100-240 VAC via Included AC Power Adapter
Power Consumption	110W
Operating Temperature	32° to 122°F (0° to +50°C)
Enclosure/Material	Painted Steel
IP Rating	IP65 Front / IP20 Rear
VESA Pattern	400 x 400mm Rear Mount Holes (M6 x 10mm Screws)
Dimensions	30.28” (W) x 18.25” (H) x 2.31” (D) (769 x 463.5 x 58.6 mm)
Weight	35.71 lbs (16.2 kg)
Humidity	5-90% RH
Shock	50 G (20 msec, 1/2 sine)
Vibration	1.5 G RMS 10-300Hz
Certifications/Approvals	UL, FCC, CE, CB, RoHS
Warranty	1 Year

Note: Specifications subject to change without notice.

DIMENSIONS (MM)

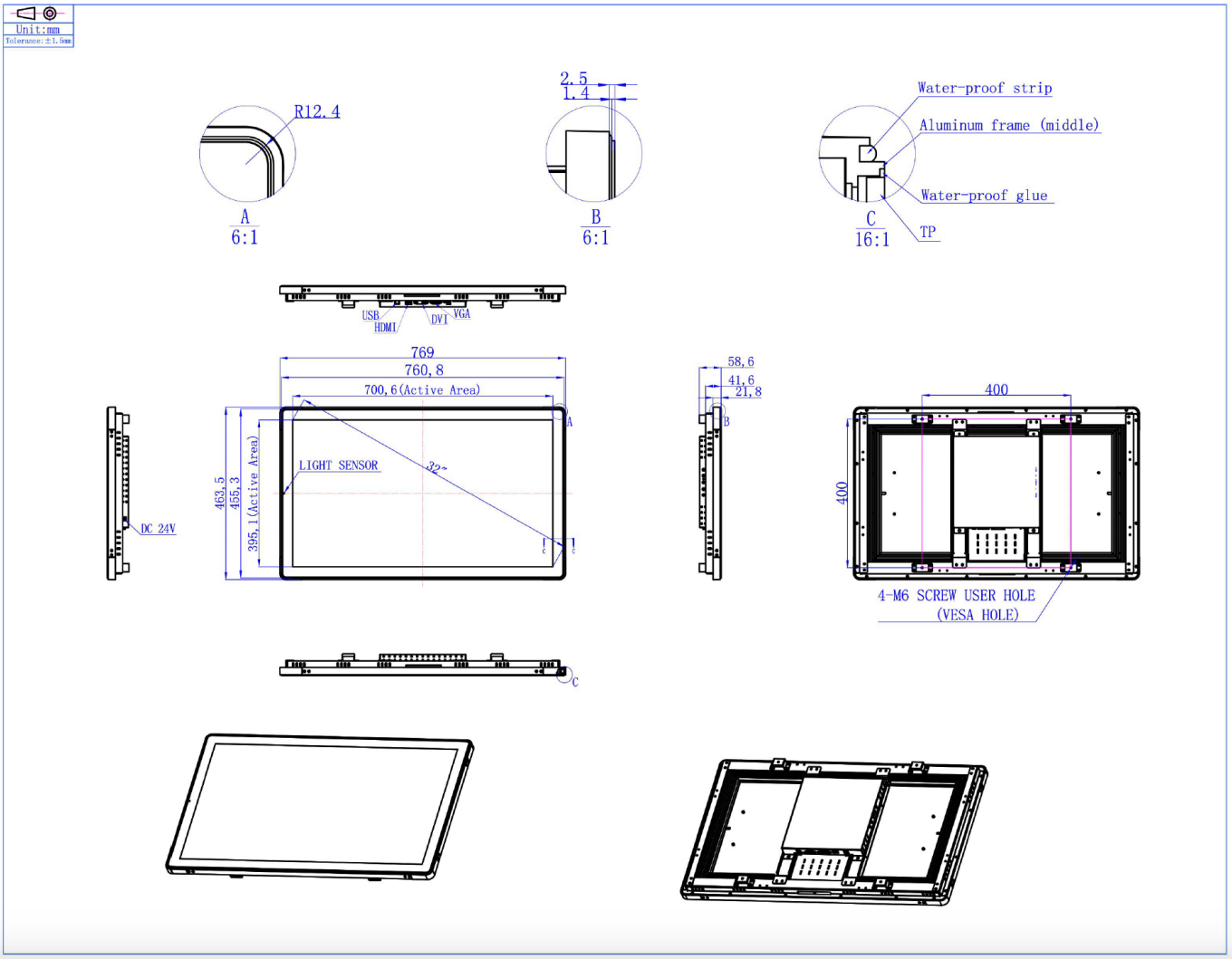

Standard Accessories:

- AC Adapter
- VGA Cable
- HDMI Cable

Available Options:

- Touchscreen
- DisplayPort