SRMX-18.5Z-36

18.5" High Brightness Monitor



- 1,000 nits Brightness
- Produces Clear, Sharp Images Even in Direct Bright Sunlight
- Full HD Resolution: 1920 x 1080 (1080p/60)
- 9-36VDC
- Ambient Light Sensor Adjusts Screen Brightness Automatically
- Lockable On-Screen Display (OSD) Controls
- Inputs: HDMI, DVI, DisplayPort, HD-SDI, VGA, Composite BNC
- Auto Re-Start After Power Loss
- *TRU-Tuff* Ensures Maximum Shock/Vibration Resistance
- Can Be Customized to Meet Your Needs
- 3-Year Warranty
- TAA Compliant

HIGH BRIGHTNESS MONITOR

The SRMX-18.5Z-36 are 18.5″ High Brightness Monitors. They feature at least 1000 nits brightness and a 16:9 aspect ratio. We design the SRMX-18.5Z-36 monitors for use in direct sunlight. Consequently, they are also perfect for other high ambient-light conditions. They utilize state-of-the-art LED backlights. The models in this series produce at least 1,000 nits brightness. In contrast, this is over 3 to 5 times brighter than standard monitors. For example, standard monitors are only 200-300 nits brightness. Therefore, the result is amazingly bright screen. This will provide you with crystal-clear images, even with bright, direct sunlight on the face of the screen. It features the following Inputs: HDMI, DVI, DisplayPort, HD-SDI, VGA, Composite BNC. For longer transmission distances, the SRMX-18.5Z-36 features an HD-SDI input.

RUGGED INDUSTRIAL MONITORS

The SRMX-18.5Z-36 Sunlight Readable monitors are extremely rugged. For instance, we build them with true industrial-grade components. Furthermore, they receive our exclusive *TRU-Tuff* treatment. The *TRU-Tuff* process includes RTV silicone on all connections and critical components. Additionally, all wires are dressed, tie-wrapped and secured. Lastly, we apply ThreadLock to all screws. The steel enclosure will ensure maximum shock and vibration resistance for this rugged 1000 nit monitor.

OUTDOOR VIEWING REQUIRES A MONITOR WITH WIDE OPERATING TEMPERATURES

We design the SRMX-18.5Z-36 High Brightness Monitor Series to operate in nearly any environmental conditions. Whether in frigid conditions or blazing heat, these sunlight displays will survive and thrive. To clarify, these monitors will operate in temperatures down to -4°F (-20°C). They will also withstand brutal heat. Moreover, operating temperatures go up to 158°F (70°C). The rugged steel enclosure assures these 18.5″high brightness displays will provide years of reliable imaging performance. Specifically, typical MTBF for these monitors is 50,000 hours.

HIGH BRIGHT MONITORS DEPLOYED WORLDWIDE

Our 18.5″ sunlight readable monitors have been deployed in a wide range of demanding industries. For example, military, law enforcement, and entertainment benefit. They are also found in inspection, oil and gas, and transportation. Additionally, see how pipeline, manufacturing and drone industries also enjoy TRU-Vu displays. *TRU-Vu* monitors are backed by our full 3-Year Warranty. This ensures you of many years of reliable service.

In conclusion, see our full line-up of industrial-grade Sunlight Readable and Daylight Readable. Visit our Advanced Search Tool, which enables you to filter by specific product attributes. This highlights all of our high brightness monitors. Additionally, you'll find the sunlight readable touch screens in all the sizes and configurations available. Browse our selections by similar sized monitors, or monitors that operate on 24VDC. TRU-Vu can provide modified or Custom OEM LCD Displays. Private Label Monitors are also an option if you have very specific requirements. Visit our wide range of LCD monitor mounts and stands to complete your installation.

SPECIFICATIONS

	SRMX-18.5Z-36
LCD Panel	18.5″ AHVA LCD; LED Backlights
Native Resolution	1920 x 1080 (1080P/60 Full HD)
Aspect Ratio	16:9
Viewable Area	16.13" (W) x 9.07" (H) (409.8 x 230.4 mm)
Pixel Pitch	0.213mm
Display Colors	16.7 M
Brightness	1,000 nits
Contrast Ratio	1,000:1
Viewing Angle	178° (H) x 178° (V)
Response Time	20 msec (Tr+Tf)
Video Inputs	VGA, HDMI, HD-SDI (Loop-Thru), Composite (BNC Loop Thru)
Touch Technology/Interface	N/A
Control	OSD (On-Screen Display) via Rear Push Buttons
Power Input	9-36VDC (90-240VAC via Optional AC Power Adapter)
Power Consumption	45W
Operating Temperature	-4° to 158° F (-20° to +70° C)
Enclosure/Material	Painted Steel
IP Rating	IP20
VESA Pattern	100 x 100mm Rear VESA Mount Holes
Dimensions	17.14" (W) x 10.88" (H) x 1.81" (D) (435.4 x 276.3 x 46 mm)
Weight	7.5 lbs (3.4 kg)
Humidity	5-90% RH
Shock	50 G (20 msec, ½ sine)
Vibration	1.5G RMS 10-200 HZ
Certifications/Approvals	RoHS, REACH
Warranty	3 Years

Note: Specifications subject to change without notice.

DIMENSIONS (MM)

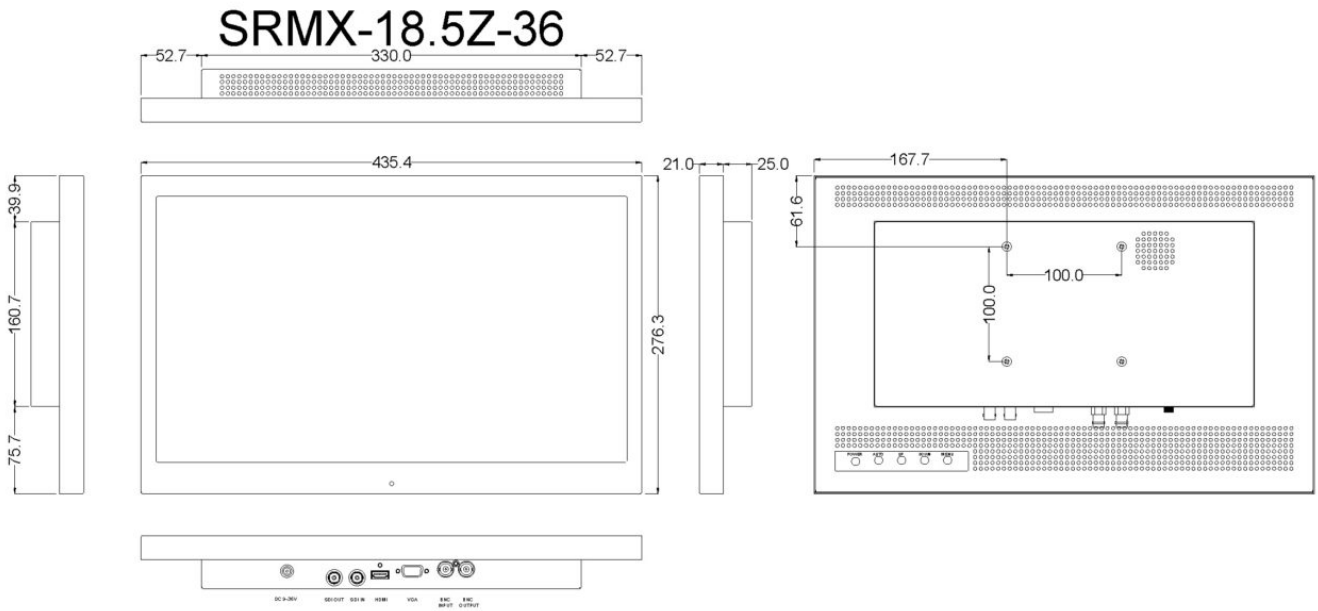

Standard Accessories:

- 2.5mm Locking Connector

Available Options:

- 90-240 VAC via PS-12LC Power Supply
- Stainless Steel NEMA 4X Waterproof Enclosure
- Touch Screen
- Aluminum Enclosure
- Wall Mount Brackets
- Tabletop Base (TTB-27)