## SRMTPWP-23.8R

### 23.8” Sunlight Readable Waterproof Panel Mount Touch Screen



- 1,000 nits Brightness
- Produces Clear, Sharp Images Even in Direct Bright Sunlight
- Projected Capacitive Touch Screen with Anti Glare Coating
- NEMA 4X Stainless Steel (front only) Panel-Mount Enclosure
- TRU-Tuff Treatment
- Automated Ambient Light Sensor
- Auto Re-Start After Power Loss
- Can Be Customized to Meet Your Needs
- 3-Year Warranty
- TAA Compliant

# 23.8″ SUNLIGHT READABLE OUTDOOR WATERPROOF TOUCHSCREEN

The SRMTPWP-23.8R are 23.8″ sunlight readable panel mounted waterproof touch screen monitors. They feature at least 1000 nits screen brightness with a 16:9 aspect ratio. We design this 23.8 sunlight touchscreen for outdoor use. It is a weatherproof touch screen specifically for use in direct sunlight. Because of the high brightness of the SRMTPWP-23.8R panel mount monitors, they are also perfect for other high ambient-light conditions. These weather proof touch screens utilize state-of-the-art LED backlights. 1000 nits brightness is over 3 to 5 times brighter than standard monitors. For example, standard monitors are only 200-300 nits brightness. Therefore, the result is an amazingly bright screen. This will provide you with crystal-clear images, even in direct, bright sunlight on the face of the screen. These are full HD resolution.

## RUGGED PANEL MOUNT TOUCH SCREEN MONITOR

These 23.8″ 1000 nit touch screen lcd displays are not only bright, but extremely rugged. For example, they are built with true industrial-grade components. Furthermore, they receive our exclusive TRU-Tuff treatment. The TRU-Tuff process includes RTV silicone on all connections and critical components. Additionally, we dress all wires, tie-wrap and secure them. Lastly, we apply ThreadLock to all screws. The rugged Stainless Steel panel mount enclosure ensures maximum shock and vibration resistance for this rugged touch screen monitor. The enclosure face has a rating of NEMA 4X Waterproof. Projected capacitive touch technology can be activated via an exposed finger, and also when using thin latex or cotton gloves. The multi-touch capability allows up to 10 simultaneous finger operation for selecting, zoom, flick, and other functions. It is also unaffected by dirt, grease or moisture on the glass surface. It is also available in Portrait orientation.

### WATERPROOF OUTDOOR TOUCH-SCREEN FLUSH MOUNT

This weatherproof touch screen monitor features a rugged waterproof stainless steel panel mount enclosure. Flush mount this unit into any panel, cabinet, door or wall. It is impervious to liquids, rust and corrosion. It is rated NEMA 4X, and features protective Anti-Reflective glass over the LCD panel. This weather proof monitor will easily withstand the elements outdoors. It is also ideal for wash-down environments. For this reason, it is widely used in industrial and food processing plants. The NEMA 4X front face ensures resistance to water. There’s also a handy guide on how to install a panel-mount touchscreen.

#### EXTREME OPERATING TEMPERATURES

We design the SRMTPWP-23.8R to operate in nearly any environmental conditions. This 23.8 sunlight touchscreen performs in frigid conditions or blazing heat. These sunlight displays will survive and thrive. To clarify, these monitors will operate in temperatures down to -22°F (-30°C). They will also withstand brutal heat. Moreover, operating temperatures go up to

176°F (+80°C). The rugged stainless steel enclosures are waterproof. We design them for panel mount or flush mount applications. The 23.8″high brightness displays will provide years of reliable imaging performance. Specifically, typical MTBF for these monitors is 50,000 hours.

**DEPLOYED WORLDWIDE**

Our 23.8″ sunlight touchscreen have been deployed in a wide range of demanding industries. For example, industries such as military, law enforcement, manufacturing and entertainment will benefit. 23.8″ bright touchscreens are also deployed in the inspection, marine, oil & gas sectors. Industrial and transportation industries also utilize this popular model. Most importantly, TRU-Vu monitors are backed by our full 3-Year Warranty. This ensures you of many years of reliable service for your high bright outdoor display.

**OUR TECHNICAL EXPERTS ARE READY TO HELP YOU FIND THE BEST DISPLAY**

With over 200 LCD monitors and touch screens on our site, selecting the ideal weatherproof touch screen solution may be a bit overwhelming. To help narrow-down the choices, check out our Advanced Search Tool. For example, this enables you to filter by your own specific search requirements. See our full line-up of industrial-grade Sunlight Readable and Daylight Readable. This highlights all of our high brightness monitors. Additionally, you'll find the sunlight readable touch screens in all the sizes and configurations available. Our full range of waterproof monitors and touch screens are available for any outdoor use. Shop by size 21.5″ to 65″ monitors , see our full line of Touch Screen Monitors or specifically Panel Mount monitors.

Finally, our team members are ready to help! We can determine the exact solution that will meet your specific needs . Certainly, TRU-Vu will help provide crystal-clear images for your operating requirements . Call (847) 259-2344 today to speak with one of our specialists. Above all, we will listen. It's one of the things we do best. Our professional advisors will ensure the monitor or touch screen you receive will be and do everything you had hoped it would!

If you prefer, fill out a quick form with your requirements, and we will guide you to the proper models that will work best.

**SPECIFICATIONS**

| | **SRMTPWP-23.8R** |
|---|---|
| LCD Panel | 23.8" LCD; LED Backlights |
| Native Resolution | 1920 x 1080 (1080P/60 Full HD) |
| Aspect Ratio | 16:9 |
| Viewable Area | 20.75" (W) x 11.67" (H) (527.04 × 296.46 mm) |
| Pixel Pitch | 0.277 mm |
| Display Colors | 16.7 M |
| Brightness | 1,000 nits |
| Contrast Ratio | 1,000:1 |
| Viewing Angle | 178° (H) x 178° (V) |
| Response Time | 25 msec (Tr+Tf) |
| Video Inputs | VGA, HDMI, DisplayPort |
| Touch Technology/Interface | Projected Capacitive/USB |
| Control | OSD (On-Screen Display) via Rear Push Buttons |

| | SRMTPWP-23.8R |
|---|---|
| Power Input | 24VDC / 100-240VAC via Internal AC Power |
| Power Consumption | 34.9W |
| Operating Temperature | -22˚ to 176˚F (-30˚ to +80˚C) |
| Enclosure/Material | Panel Mount/Stainless Steel with Galvanized Rear (607.4 x 378.1 mm cutout) |
| IP Rating | IP65 Front / IP20 Rear |
| VESA Pattern | 100 x 100 & 200 x 100 mm Rear VESA Mount Holes |
| Dimensions | 25.27″ (W) x 16.20″ (H) x 2.44″ (D) (641.80 x 411.50 x 62.05 mm) |
| Weight | 22.5 lbs (10.2 kg) |
| Humidity | 5-90% RH |
| Shock | 50 G (20 msec, ½ sine) |
| Vibration | 1.5G RMS 10-200 HZ |
| Certifications/Approvals | RoHS, REACH |
| Warranty | 3 Years |

Note: Specifications subject to change without notice.

**DIMENSIONS (MM)**

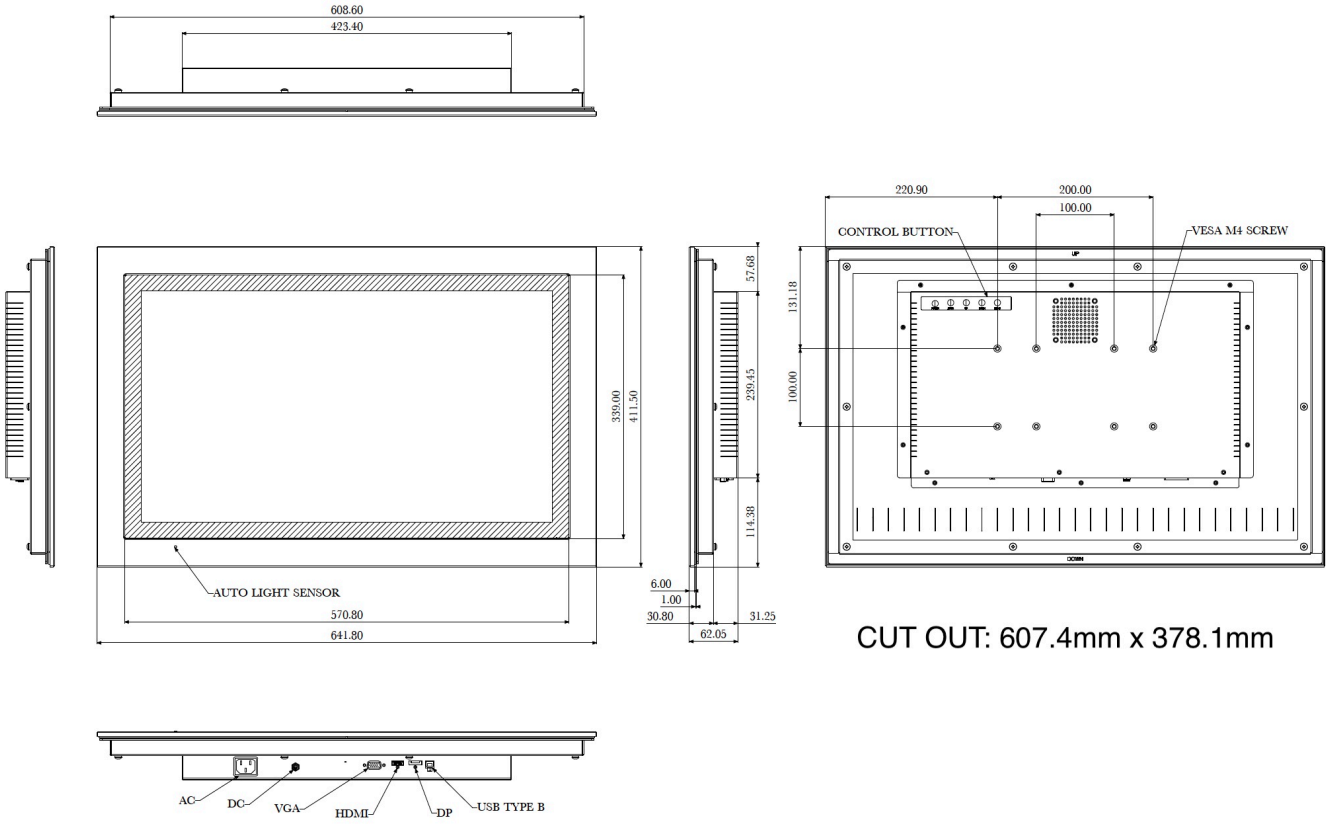


**Standard Accessories:**

- VGA Cable

- HDMI Cable
- USB Cable
- Locking Power Pigtail
- Power Cord

**Available Options:**

- DVI Input
- HD-SDI Input
- Private Label
- Other Customer-Specific Modifications